STEELMAN POWER CAPACITORS
SPECIFICATION SHEET

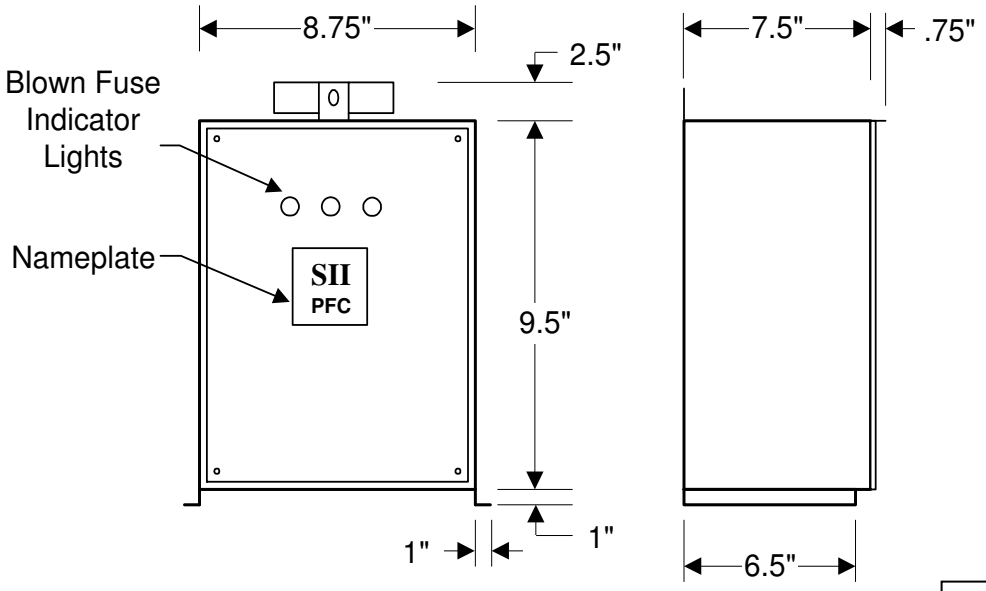

Internal Wiring Diagram

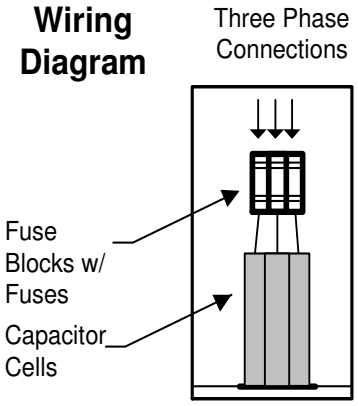

MODEL M013.0-480-FPL

13 KVAR 480 VOLT Fused with pilot lights
Three Phase 60 Hz NEMA 3R Enclosure
Rated Current: 15.6 Amps
Recommended Wire Size: 10 AWG
APPROX. WEIGHT 15 LBS. EACH

Life Expectancy: 20 years
Temperature: -40°C to +50°C
Discharge Resistors: Included, will reduce residual voltage to less than 50 volts in one minute after removal from service.
Pressure Sensitive Interrupter in each capacitor cell.

Self Clearing Design

OPTIONS:
- *Pigtail- 5' electrical cord ready for connection
- *Built-In Contactor

STEELMAN ADVANTAGE OPTION

600Volt, 70°C rated capacitors

ENHANCES CAPACITOR LIFE & PERFORMANCE CHARACTERISTICS

Enclosures are rated NEMA 3R, Outdoor/Indoor.
Provisions for wall, pole, or floor mounting are included.

TWO YEAR LIMITED WARRANTY!

UL LISTED

STEELMAN INDUSTRIES, INC.
2800 HWY. 135 N P.O. BOX 1461 KILGORE, TEXAS 75662
PHONE: (903) 984-3061 FAX: (903) 984-1384